## Section 1.4 – Surface Area of Other Composite Objects

To find the surface area of a triangular prism, we need to use two formulas.

Area of a Rectangle = $(B \times h)$

Area of a Triangle = $(B \times h)/2$

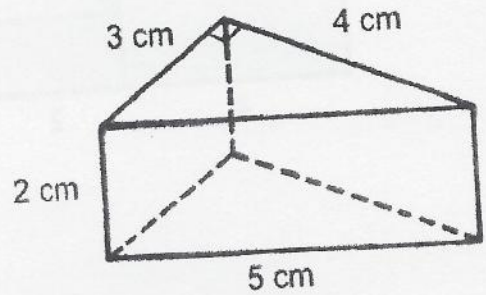


**Example 1:**

**2 Triangular Faces:**

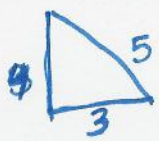


$h = 5$
$b = 3$

Area $\Delta = \left(\frac{3 \times 5}{2}\right) 2 = 15 \text{ cm}^2$

**3 Rectangular Faces:**

First:

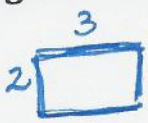


$A = 3 \times 2 = 6 \text{ cm}^2$

Second:


$A = 4 \times 2 = 8 \text{ cm}^2$

Third:


$A = 5 \times 2 = 10 \text{ cm}^2$

**Total Surface Area:**

T.A. = Area of 2 triangles + Area of 3 rectangles

$= 15 \text{ cm}^2 + 6 \text{ cm}^2 + 8 \text{ cm}^2 + 10 \text{ cm}^2 = 39 \text{ cm}^2$

**Try These:**

A)

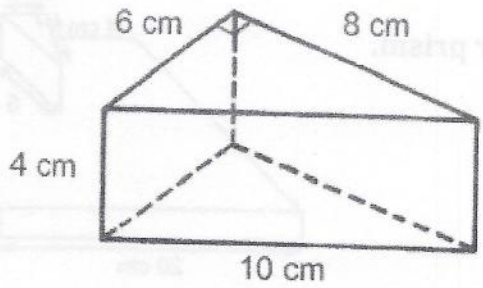


AREA OF 2 △

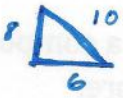


$A = 2 \times \frac{(6 \times 8)}{2} = 48\ cm^2$

Area of Rect 1


$A = (6 \times 4) = 24\ cm^2$

Area of Rect. 2

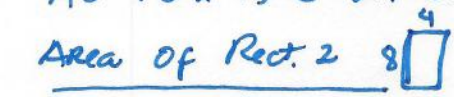


$A = (8 \times 4) = 32\ cm^2$

Area of Rect. 3


$A = (10 \times 4) = 40\ cm^2$

Total Surface area = Area of 2 triangles + Area of 3 Rectangles = $48\ cm^2 + 24\ cm^2 + 32\ cm^2 + 40\ cm^2$

S.A. = $144\ cm^2$

B)

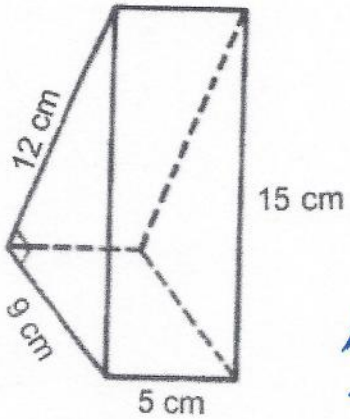


Area of 2


$A = 2 \times \left(\frac{b \times h}{2}\right) = 2\left(\frac{9 \times 12}{2}\right) = 108\ cm^2$

Area of


$A = b \times h = 9 \times 5 = 45\ cm^2$

Area of


$A = b \times h = 12 \times 5 = 60\ cm^2$

Area of

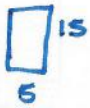


$A = b \times h = 5 \times 15 = 75\ cm^2$

Total Surface Area = $108\ cm^2 + 45\ cm^2 + 60\ cm^2 + 75\ cm^2 = 288\ cm^2$

## *Finding the Area of a Composite Object*

When finding the surface area of a composite figure involving triangular prisms, we use the same process we did before.

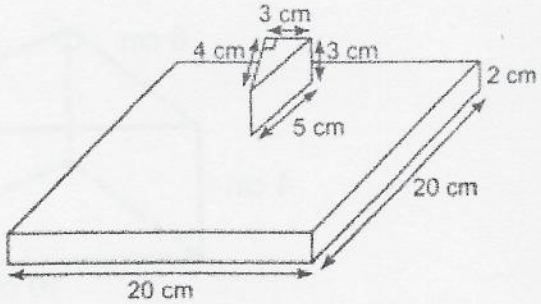


**Step 1:** Calculate the surface area of the larger prism.

**Front/Back :** 20 2

$b \times h = 20 \times 2 = 40\ cm^2$

$40 \times 2 = 80\ cm^2$

**Top/Bottom:** 20 20

$b \times h = 20 \times 20 = 400\ cm^2$

$400\ cm^2 \times 2 = 800\ cm^2$

**Side/Side:** 20 2

$b \times h = 20 \times 2 = 40\ cm^2$

$40\ cm^2 \times 2 = 80\ cm^2$

**Total Surface Area:**

Sum of all areas $= (80 + 800 + 80)\ cm^2 = 960\ cm^2$

**Step 2:** Calculate the surface area of the smaller prism.

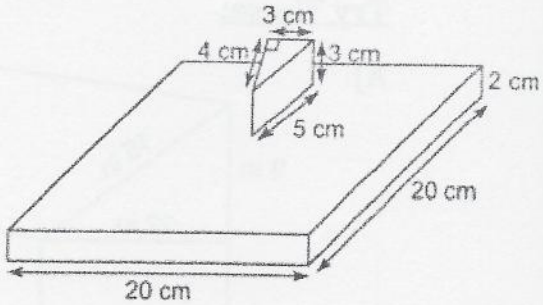


**2 Triangular Faces:** 


$$2 \times \left(\frac{b \times h}{2}\right) = 2 \times \left(\frac{4 \times 3}{2}\right)$$

Area Triangles $= 12\ cm^2$

**3 Rectangular Faces:**

First: 


$b \times h = (3 \times 3)\ cm^2 = 9\ cm^2$

Second: 


$b \times h = (4 \times 3)\ cm^2 = 12\ cm^2$

Third: 


$b \times h = (3 \times 5)\ cm^2 = 15\ cm^2$

**Total Surface Area:** Area of Triangles + Area of 3 Rectangles = $48\ cm^2$

$12\ cm^2 + 9\ cm^2 + 12\ cm^2 + 15\ cm^2 =$

**Step 3:** Calculate the overlap.

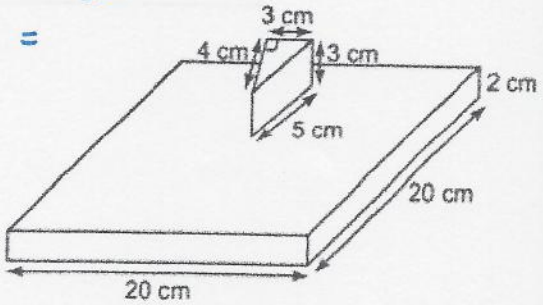


What is the shape of the overlap?

A triangle

Be careful with these composite objects the overlap could be a triangle OR rectangle.

**Area of Triangle:**

$$\frac{b \times h}{2} = \frac{4 \times 3}{2} = 6\ cm^2$$

$\therefore 1008\ cm^2 - 12\ cm^2$

$996\ cm^2$

**Total Surface Area:**

(Area of Prism 1 + Area of Prism 2) - Overlap × 2 $= (960 + 48)\ cm^2 - (6 \times 2)\ cm^2$

**Try These:**

A)

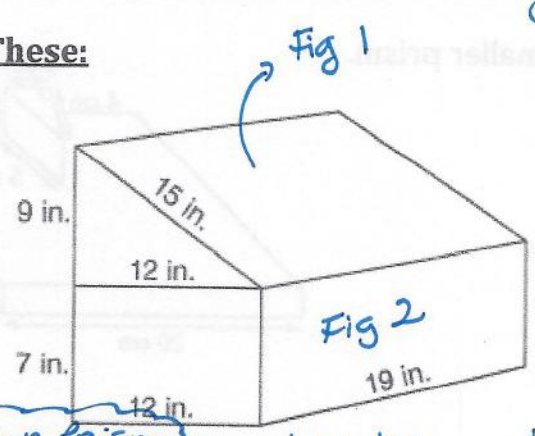


Fig 1 → Triangular Prism

Area of 2 $\triangle$ (9, 15, 12)

$2 \times \left(\frac{9 \times 12}{2}\right) in^2 = 108\ in^2$

Area of ▭ (19, 9)

$b \times h = 19 \times 9 = 171\ in^2$

Area of ▭ (19, 15)

$b \times h = 19 \times 15 = 285\ in^2$

Area of ▭ (19, 12)

$b \times h = 19 \times 12 = 228\ in^2$

TOTAL AREA $= 108 + 171 + 285 + 228 = 792\ in^2$

Fig 2 → Rectangular Prism

Front/back

$2 \times (12 \times 7) = 168\ in^2$

top/bottom

$2 \times (12 \times 19) = 456\ in^2$

R/L

$2 \times (19 \times 7) = 266\ in^2$

total of $890\ in^2$

Overlap

▭ (19, 12)

$2 \times (12 \times 19) = 456\ in^2$

Total Area = Area Fig.1 + Area Fig2 − overlap

$= (792\ in^2 + 890\ in^2) - 456\ in^2$

$= 1682\ in^2 - 456\ in^2$

$= 1226\ in^2$

B)

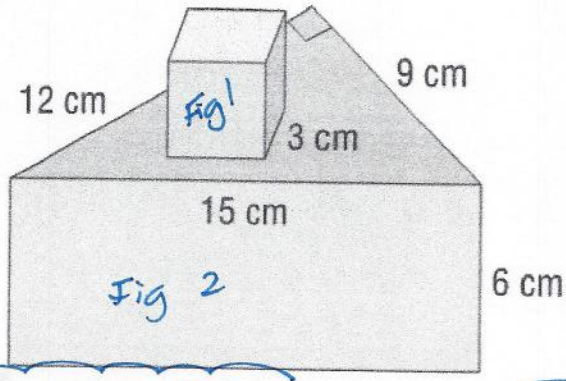


Fig 1 : Cube ▭ (3)

Area Fig 1 = Area 1 face × 6 $= (3 \times 3) \times 6$

$= 9 \times 6 = 54\ cm^2$

Fig. 2 : Triangular Prism

Area of 2 $\triangle$ (12, 15, 9)

$2 \times \left(\frac{b \times h}{2}\right) = 2 \times \left(\frac{9 \times 12}{2}\right) = 108\ cm^2$

Area of ▭ (15, 6)

$b \times h = 15 \times 6 = 90\ cm^2$

Area of ▭ (9, 6)

$b \times h = 9 \times 6 = 54\ cm^2$

Area of ▭ (12, 6)

$b \times h = 12 \times 6 = 72\ cm^2$

Total Area Fig 2 : $324\ cm^2$

Overlap

1 face of the cube × 2

$= (3 \times 3) \times 2 = 18\ cm^2$

Total Area = (Area of Fig1 + Area of Fig. 2) − Overlap

$= (54\ cm^2 + 324\ cm^2) - 18\ cm^2$

$= 378\ cm^2 - 18\ cm^2$

$= 360\ cm^2$

***Recall:***

Surface Area Formula for a Cylinder $SA = 2\pi r^2 + 2\pi rh$

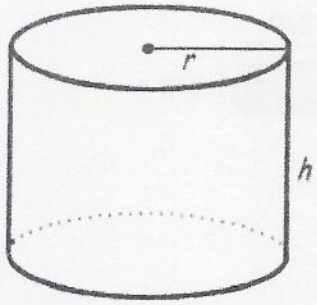


**Example 1:**

Two cakes are arranged as shown below. These cakes are to be covered in frosting. What is the area of the frosting?

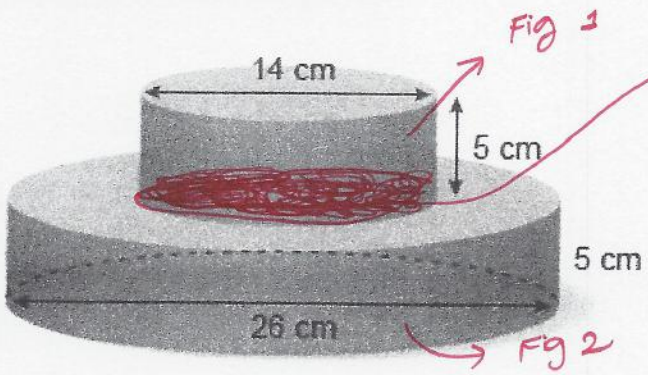


Overlap

Area of circle $= \pi r^2$

$= \pi (7)^2 = 49\pi$

Multiply by 2

$2 \times 49\pi = 98\pi$

$= 307.87 \text{ cm}^2$

$S_A$ Fig 1

$r = 7$ cm

$h = 5$ cm

$S_A = 2\pi r^2 + 2\pi rh$

$= 2\pi (7)^2 + 2\pi (7)(5) \text{ cm}^2$

$= (49)(2)\pi + 2\pi (35) \text{ cm}^2$

$= 98\pi + 70\pi$

$= 168\pi \text{ cm}^2 = 527.78 \text{ cm}^2$

$S_A$ Fig 2

$r = 13$ cm

$h = 5$ cm

$S_A = 2\pi r^2 + 2\pi rh$

$= 2\pi (13)^2 + 2\pi (13)(5)$

$= 169(2)\pi + 130\pi$

$= 338\pi + 130\pi$

$= 468\pi = 1470.26 \text{ cm}^2$

SURFACE AREA $= (S_A \text{ Fig. } 1 + S_A \text{ Fig. } 2) - \text{Overlap}$

$= (527.78 + 1470.26) - 307.87 \text{ cm}^2$

$= 1690.17 \text{ cm}^2$

**Example 2:**

$A_{\square} = b \times h$

Figure 1

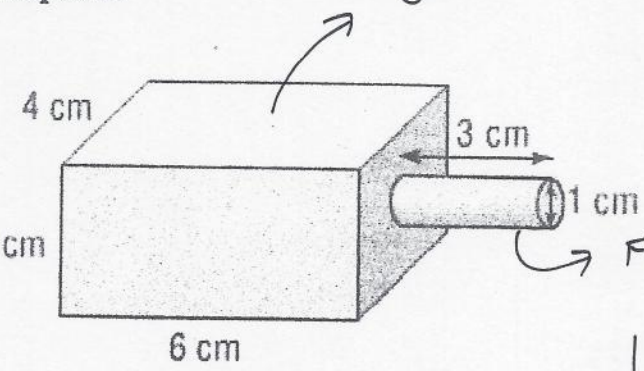


Figure 2

Remember:

$$\text{Total Area} = (\text{Area Fig 1} + \text{Area Fig 2}) - \text{Overlap}$$

$S_A$ Figure 1 → Rectangular Prism

Area Front / back

$(3 \times 6)\ cm^2 \times 2 = 36\ cm^2$

Area Top / bottom

$(4 \times 6)\ cm^2 \times 2 = 48\ cm^2$

Area Right / left

$(4 \times 3) \times 2 = 24\ cm^2$

Total Area = $(36 + 48 + 24)\ cm^2$

$S_A$ Fig 1 = $108\ cm^2$

$S_A$ Fig. 2 → Cylinder

$r = 0.5$ cm $\quad h = 3$ cm

$S_A = 2\pi r^2 + 2\pi r \cdot h$

$= [2\pi (0.5)^2 + 2\pi (0.5)(3)]\ cm^2$

$= [2\pi (0.25) + 3\pi]\ cm^2$

$= (0.5\pi + 3\pi)\ cm^2$

$= 3.5\pi\ cm^2 = 10.99\ cm^2$

$S_A$ Fig 2 = $11\ cm^2$

the OVERLAP is THE AREA OF ONE CIRCLE × 2:

$$\text{Overlap} = (\pi r^2) \times 2$$

$$= \pi (0.5)^2 \times 2 = \pi (0.25) \times 2\ cm^2$$

$$= \pi (0.50)\ cm^2 = 1.57\ cm^2$$

So, TOTAL AREA

$$\text{Total } S_A = (S_A \text{ Fig 1} + S_A \text{ Fig 2}) - \text{Overlap}$$

$$= (108\ cm^2 + 11\ cm^2) - 1.57\ cm^2$$

$$= 119\ cm^2 - 1.57\ cm^2 = 117.43\ cm^2$$