Section 1.3 – Surface Area of Objects Made from Right Rectangular Prisms

Investigation

Assume each face of a linking cube has 1 unit^2.

What is the surface area of 1 cube? Now link 2 cubes together and determine the surface area. Continue to do so, linking each additional cube to the end creating a "train".

Fill in the chart below.

Number of Cubes	Surface Area (square units)
1	6 faces = 1 × 6 = 6 unit^2
2	10 faces = 1 × 10 = 10 unit^2
3	14 faces = 1 × 14 = 14 unit^2
4	18 faces = 1 × 18 = 18 unit^2
5	22 faces = 1 × 22 = 22 unit^2

What happens to the surface area each time you add a cube? Why do you think it changes this way?

It increases by 4, and not by 6. This is because of what we call the "overlaps", the places where the cubes come together and where those "touching" faces cancel each other.

In each overlap, 2 faces cancel each other!

Here is an object made from 4 cubes. What is the surface area? How did you determine the surface area?

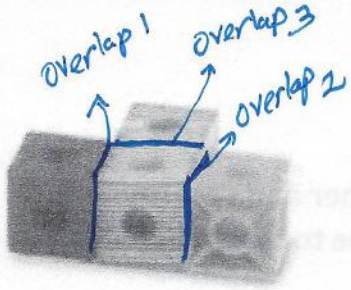

2 Methods:

Method 1 "Views"

Front 3
Back 3
Top 4
Bottom 4
Right 2
Left 2

18 cm²

Method 2

Cubes: 4
Total faces = 4 × 6 = 24
Overlaps = 3
Overlapped faces = 3 × 2 = 6
Area = Total faces − Overlapped faces
= 24 − 6
= 18 cm²

We could easily find the surface area by finding the total surface area of each block, adding them together and then subtracting the Overlaps **!**

Find the surface area of the object below:

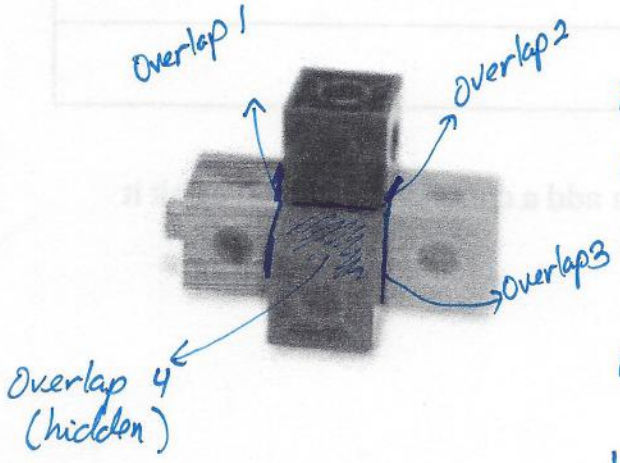

Method 1

Front 4
Back 4
Bottom 4
Top 4
Right 3
Left 3

22 cm²

Method 2

Cubes: 5
total faces = 5 × 6 = 30
Overlaps: 4
Overlapped faces = 4 × 2 = 8
total area = Total Faces − overlapped faces = 30 − 8 = 22 cm²

Surface Area of Square/Rectangular Prisms

To find the surface area of any prism, we need to individually find the area of all surfaces and add them together. In the case of a rectangular prism, all the faces are rectangles so we use the same formula for all six rectangles.

Formula for the Area of a Rectangle: base × height

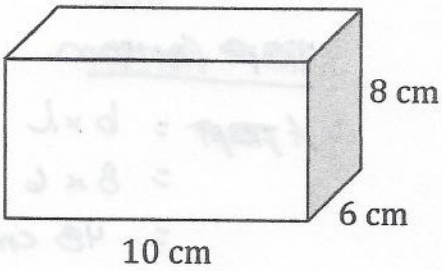

Example 1:

Front/Back: (Because they are equal)

Area = b × h
= (10 cm) × (8 cm)
= 80 cm²

But front = back so
80 cm² × 2 = 160 cm²

Top/Bottom: (Because they are equal)

Area = b × h
= (10 cm) × (6 cm)
= 60 cm²

But top = bottom so
(60 × 2) cm² = 120 cm²

∴ S.A = 376 cm²

Side/Side:

Area = b × h
= 6 cm × 8 cm
= 48 cm²

But right = left sides, so
(48 × 2) cm² = 96 cm²

Total Surface Area:

Sum of areas of all sides = 160 + 120 + 96 = 376 cm²

Try these:

a)

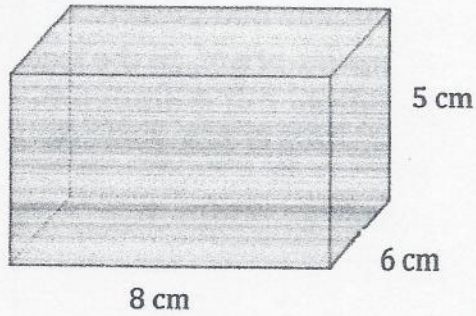

Surface area = Area Top/Bottom + Area Front/Back + Area Right/left

$= 96\ cm^2 + 80\ cm^2 + 60\ cm^2$

$= 236\ cm^2$

~~Top/Bottom~~

$A_{Top} = b \times h$

$= 8 \times 6\ cm^2$

$= 48\ cm^2$

But ~~Top~~ = ~~bottom~~, so

$(48 \times 2)\ cm^2$

$96\ cm^2$

~~Front/Back~~

$A_{front} = b \times h$

$= 8\ cm \times 5\ cm$

$= 40\ cm^2$

But front = back, so

$(40 \times 2)\ cm^2$

$80\ cm^2$

Right / Left

$A_{Right} = b \times h$

$= 6\ cm \times 5\ cm$

$= 30\ cm^2$

But Right = Left, so

$(30 \times 2) = 60\ cm^2$

b)

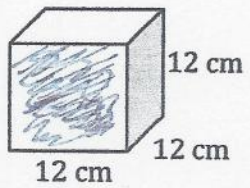

A cube! this figure has 6 equal faces

- Area of front face = $b \times h = 12 \times 12 = 144\ cm^2$
- Since there are 6 faces,

$T.A$ = Area of 6 faces

$= (144\ cm^2) \times 6$

$= 864\ cm^2$

A COMPOSITE object is composed of two or more objects.

To find the surface area of a composite object, imagine dipping the object in paint. What happens when you separate the blocks below once they have been painted? – You will have an area on each block that is not painted because it was touching the other block. This unpainted part is called the **overlap**.

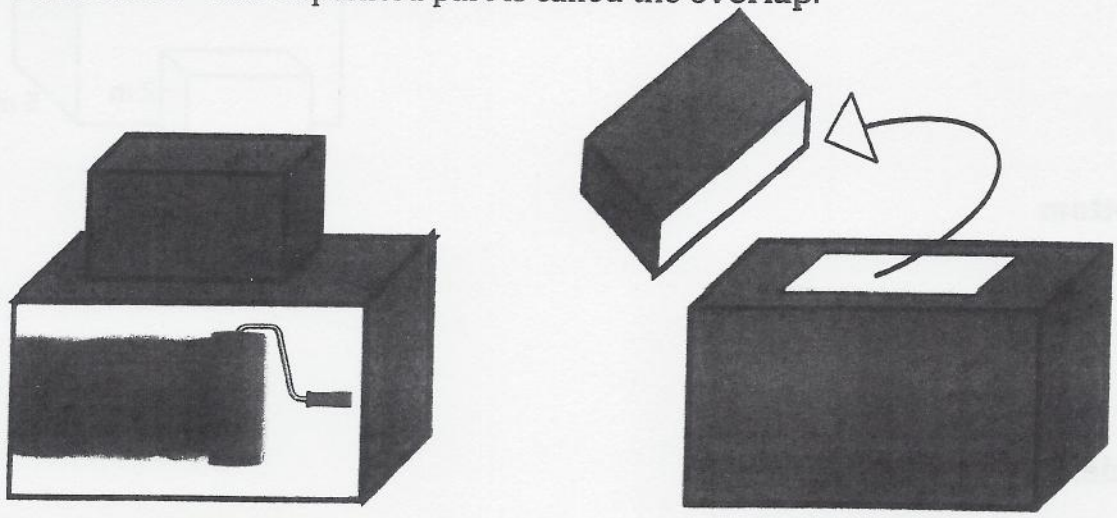

To find the surface area, we calculate the area of all the faces covered in paint. The overlap is not painted, so it is not part of the surface area; thus we find the total surface area of each block, add them together and subtract the overlap from the total at the end.

Example 1:

1. First calculate the surface area of the larger prism.

Front/Back: 10 6

$(b \times h) \times 2 = (10 \times 6) \times 2$

$= 60 \times 2 = 120\ m^2$

Top/Bottom 10 5

$(b \times h) \times 2 = (10 \times 5) \times 2$

$= 50 \times 2 = 100\ m^2$

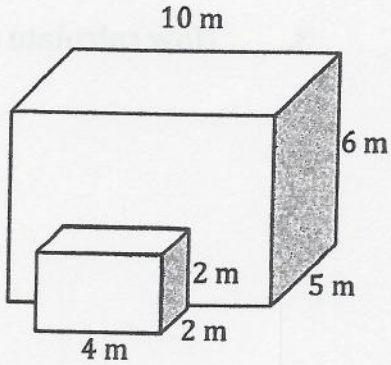

Side/Side: 6 5

$(b \times h) \times 2 = (5 \times 6) \times 2 = 30 \times 2 = 60\ m^2$

Total Surface Area:

Front/back + top/bottom + side/side = $120 + 100 + 60 = 280\ m^2$

2. Second, calculate the surface area of the smaller prism.

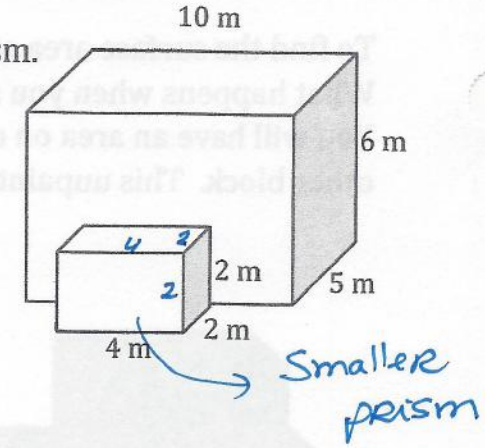

Front/Back:

$A_{FRONT} = b \times h$
$= (4 \times 2)\ m^2 = 8\ m^2$

$A_{FRONT/BACK} = 2 \times 8\ m^2 = 16\ m^2$

Top/Bottom

$A_{TOP} = b \times h$
$= (4 \times 2)\ m^2 = 8\ m^2$

$A_{TOP/BOTTOM} = 2 \times 8\ m^2 = 16\ m^2$

Area of Smaller Prism $= 40\ m^2$

Side/Side:

$A_{SIDE} = b \times h$
$= (2 \times 2)\ m^2 = 4\ m^2$

$A_{SIDE/SIDE} = 2 \times 4\ m^2 = 8\ m^2$

Total Surface Area:

Total Surface Area = Sum of all areas
$= 16 + 16 + 8\ m^2$
$= 40\ m^2$

Remember, overlaps are multiplied by 2

3. Now calculate the overlap.

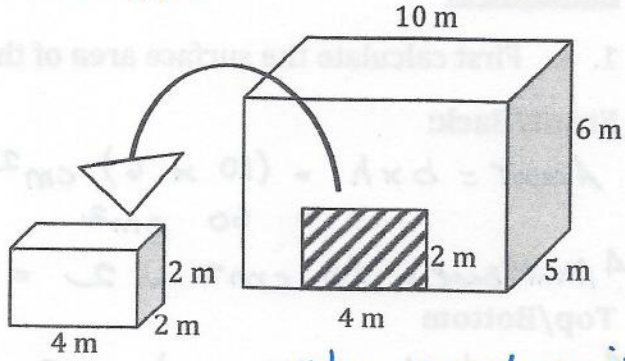

Area of overlap $= b \times h$
$= (4 \times 2)\ m^2$
$= 8\ m^2$

the overlap is a Rectangle with $b = 4\ m$ $h = 2\ m$

Total Surface Area of the Composite Figure:

$280\ m^2 + 40\ m^2 - (2 \times 8)\ m^2 = 304\ m^2$

SA_{rea} of Large Object + SA_{rea} of Small Object − 2 × Overlap

$320\ m^2 - 16\ m^2$

Try These:

The overlap is 4 × 1

1)

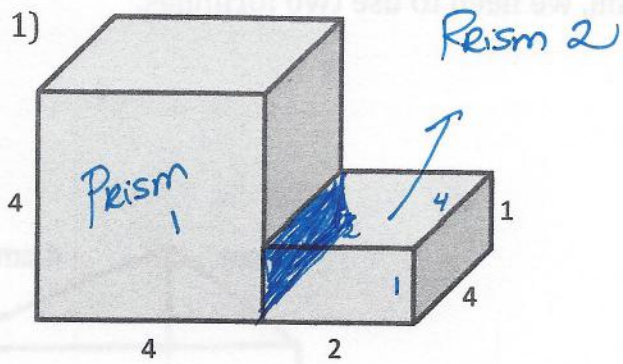

Prism 1 → Cube!

Area of Cube = (Area of 1 face) × 6

= (b×h) × 6

= (4 × 4) × 6

= 96 units²

Prism 2 → Rectangular Prism

Front = back
Top = bottom
Right = Left

$A_{front/back}$ = (b×h) × 2

(2 × 1) × 2 = 4 units²

$A_{top/bottom}$ = (b×h) × 2

(2 × 4) × 2 = 8×2 = 16 units²

$A_{right/left}$ = (b×h) × 2

(4 × 1) × 2 = 4×2 = 8 units²

Area of Prism 2 = 4 + 16 + 8 = 28 units²

Overlap → b×h = 4 × 1 = 4 units²

- Figure made of 3 prisms
- there are 2 overlaps

2)

Answer: 96 units²

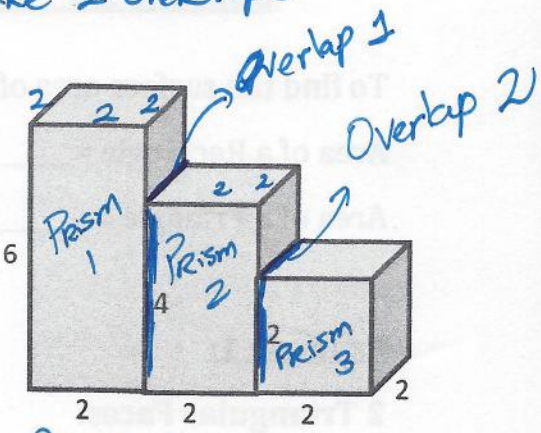

Area of Prism 1

$A_{front/back}$ = 2 × (2×6) = 2 × 12 = 24 units²

$A_{top/bottom}$ = 2 × (2×2) = 2 × 4 = 8 units²

$A_{Right/left}$ = 2 × (2×6) = 2 × 12 = 24 units²

56 units²

Area of Prism 2

$A_{front/back}$ = 2 × (2×4) = 2 × 8 = 16 units²

$A_{top/bottom}$ = 2 × (2×2) = 2 × 4 = 8 units²

$A_{Right/left}$ = 2 × (2×4) = 2 × 8 = 16 units²

40 units²

Area of Prism 3 (A cube)

A = Area 1 face × 6 = (2×2) × 6 = 24 units²

Overlap 1 → A. Rectangle 4 × 2

A = 4×2 = 8 units²

Overlap 2 → A square 2 × 2

A = 2×2 = 4 units²

Total Area = Sum of all areas − Sum of overlaps × 2

= (56 + 40 + 24) − ((8×2) + (4×2))

= 120 − (16 + 8) = 120 − 24

T.A = 96 units²

∴ S.A. = 116 units²

Total Area = (Area P_1 + Area P_2) − Overlap × 2

→ (96 + 28) − (4×2) = 116 units²