NOMBRE: _____

P.A.T Prep

Transformations in the Cartesian Plane: *Rotations, Reflexions, Translations*

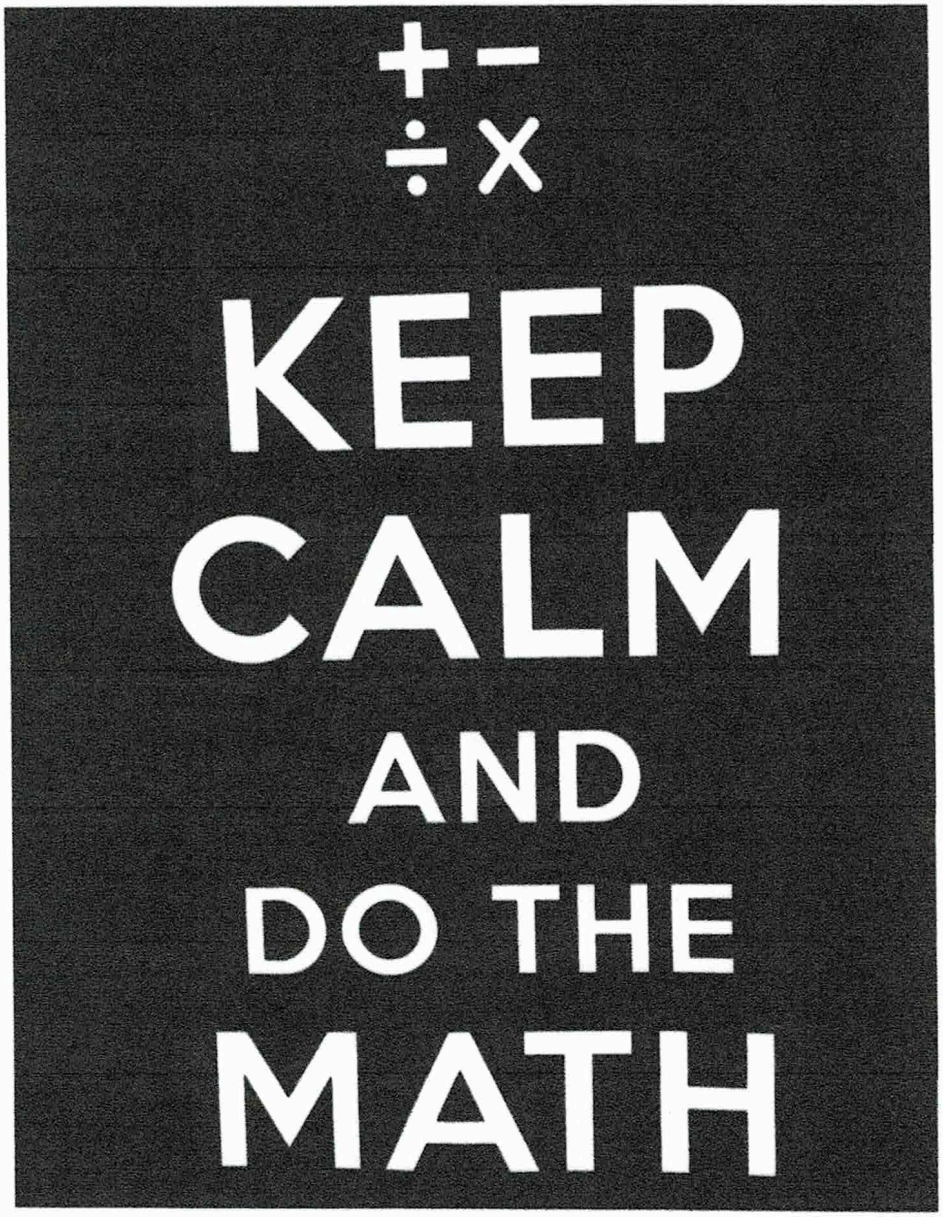

St. Brendan School

Mr. Martínez

TRANSFORMATIONS
CARTESIAN PLAINE
→ Rotations
→ Reflexion
→ TRANSLATION

20. Which of the following diagrams illustrates a 90° rotation of triangle XYZ counter-clockwise about the origin?

A.

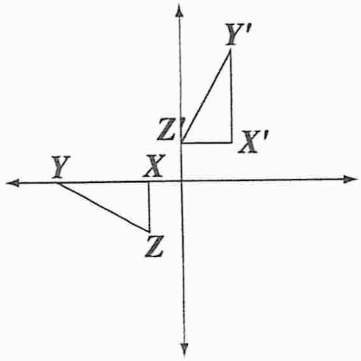

B.

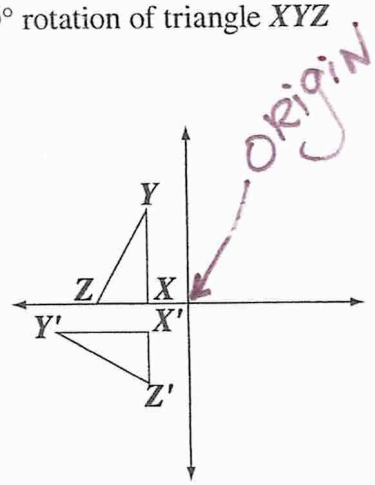

clockwise

counter clockwise

C.

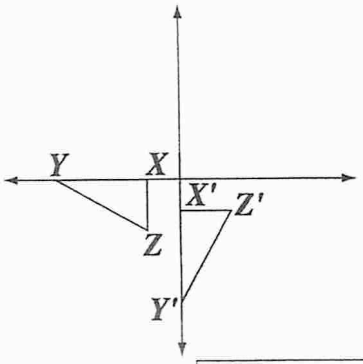

D.

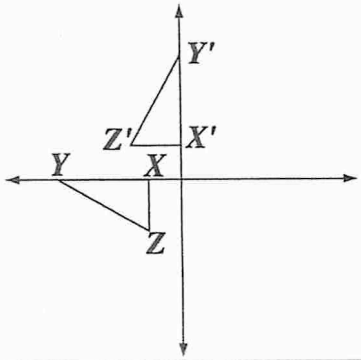

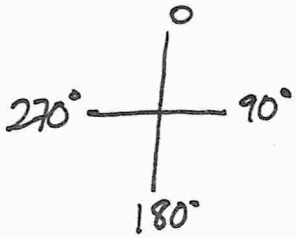

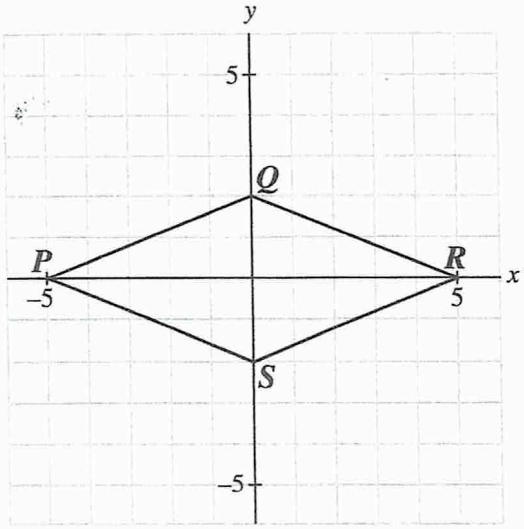

16. If the shape shown above is rotated 90 degrees clockwise about the origin to form the quadrilateral $P'Q'R'S'$, then P' would be located at

A. (5, 0)

B. (0, 5)

C. (0, –5)

D. (–5, 0)

The 2-D shape shown on the Cartesian plane below is reflected about the y-axis.

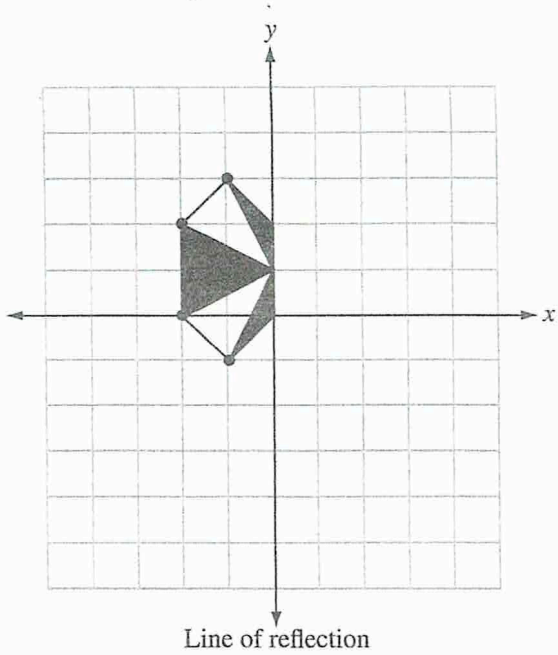

Reflection
↓
Mirror image

32. If the original 2-D shape and the reflected image combine to form a new 2-D shape, what is the angle of rotational symmetry of the new 2-D shape?

A. 90°
B. 180°
C. 270°
D. 360°

An incomplete 2-D shape and its line of symmetry are shown in the diagram below.

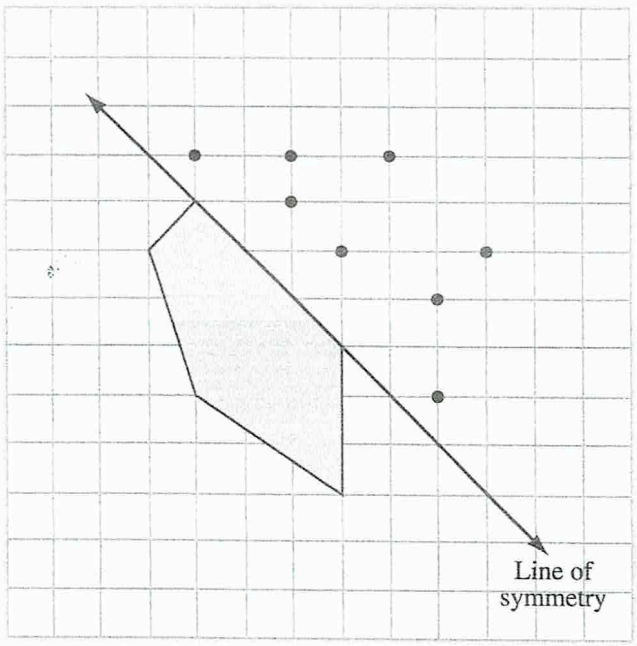

Numerical Response

4. When the 2-D shape is completely drawn, how many points will be inside the 2-D shape?

Answer: _____

(Record your answer in the numerical-response section on the answer sheet.)

Triangle JKL, shown below, undergoes the following transformations:

- a translation of 3 units left and 4 units down, followed by
- a 90° clockwise rotation about vertex L'

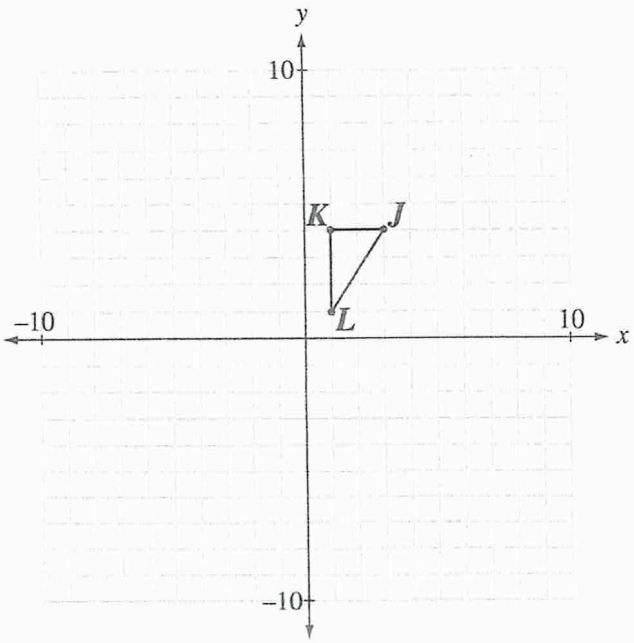

Translation
↓
• Shape is not altered
• Just moves

38. Which of the following rows represents the ordered pair for each vertex after **both** the transformations described above have been completed?

Row	J''	K''	L''
A.	(1, –5)	(1, –3)	(–2, –3)
B.	(–5, –1)	(–5, –3)	(–2, –3)
C.	(0, –4)	(0, –2)	(–3, –2)
D.	(–2, –3)	(1, –3)	(1, –5)

The triangle JKL shown below undergoes the translation $(x, y) \rightarrow (x + 3, y - 2)$.

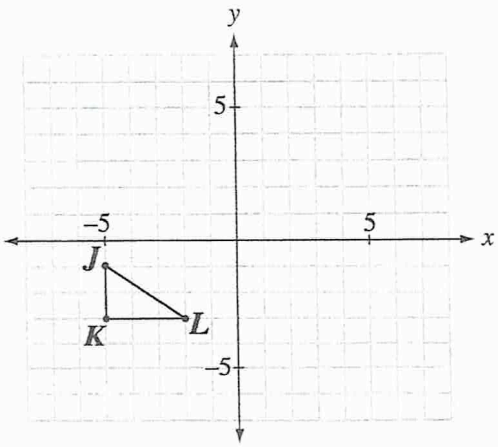

Row	J′	K′	L′
A.	(–2, –3)	(–2, –5)	(–1, 5)
B.	(–2, –3)	(–2, –5)	(1, –5)
C.	(–8, –3)	(–8, –1)	(–5, 1)
D.	(–8, –3)	(–8, –1)	(5, –1)

3. Which of the following rows represents the coordinates of the resulting image?

Triangle *JKL*, shown below, undergoes the following transformations:

- a 90° clockwise rotation about vertex *L*
- a translation of 3 units right and 4 units up

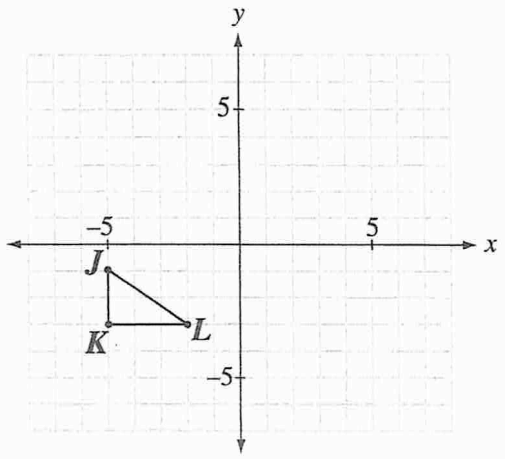

33. Which of the following rows represents the ordered pair for each vertex after **both** the transformations described above have been completed?

Row	*J″*	*K″*	*L″*
A.	(1, 1)	(1, 4)	(3, 4)
B.	(1, 1)	(1, –2)	(–1,–2)
C.	(4, 3)	(2, 3)	(2, 0)
D.	(3, 4)	(1, 4)	(1, 1)