Application of Adding and Subtracting

1a. Write a simplified expression for the perimeter of the triangle.

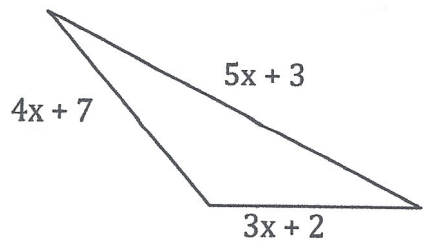

Answer: $(5x + 3) + (4x + 7) + (3x + 2)$

$= 5x + 4x + 3x + 3 + 7 + 2$
$= 12x + 12$

b. If the value of x = 4 cm ,what is the perimeter of the triangle?

Perimeter $= 12x + 12$
$= 12(4) + 12$
$= 48 + 12$
$= 60$ cm

2. Subtract $2x^2 + 2x + 5$ from $5x^2 - 7x + 4$

Means: $(5x^2 - 7x + 4) - (2x^2 + 2x + 5)$

$= 5x^2 - 7x + 4 - 2x^2 - 2x - 5$
$= 3x^2 - 9x - 1$

3. Subtract the sum of a + b and 2a – b from 4a – 4b.

Sum: $(a + b) + (2a - b) = 3a$

Answer: $(4a - 4b) - (3a)$
$= 4a - 4b - 3a$
$= a - 4b$

4. Write a monomial that describes the perimeter.

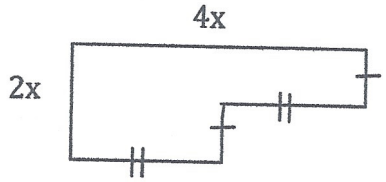

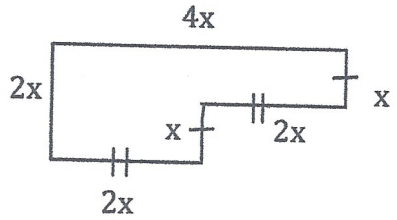

Perimeter: $4x + x + 2x + x + 2x + 2x = 12x$

5. Find the missing side if the Perimeter is $5x + 3y - 2$.

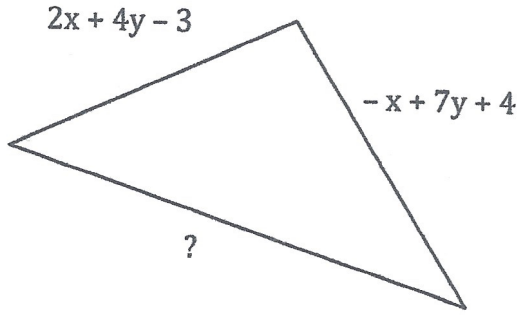

Need sum of given sides first.

$(2x + 4y - 3) + (-x + 7y + 4)$

$= x + 11y + 1$

Subtract sum of sides from Perimeter

$(5x + 3y - 2) - (x + 11y + 1)$

$= 5x + 3y - 2 - x - 11y - 1$

$= 4x - 8y - 3$

... is the length of the missing side.

6. Find the length of PQ.

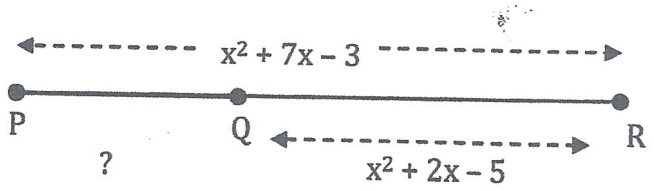

Answer: $(x^2 + 7x - 3) - (x^2 + 2x - 5)$

$= x^2 + 7x - 3 - x^2 - 2x + 5$

$= 5x + 2$

7a. Write a simplified expression for the perimeter.

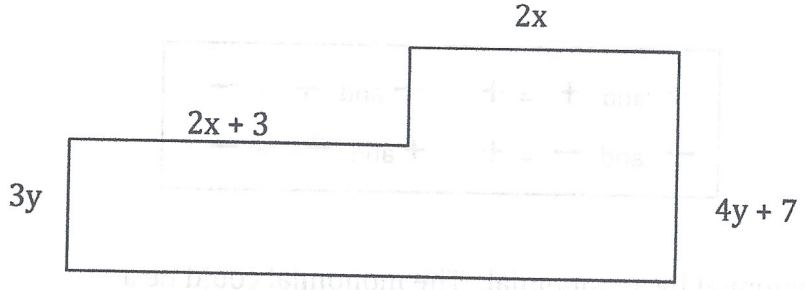

Perimeter means to add up all the sides. How many sides does this shape have?

6 sides, but we are only given 4 so we need find the other 2 missing sides.

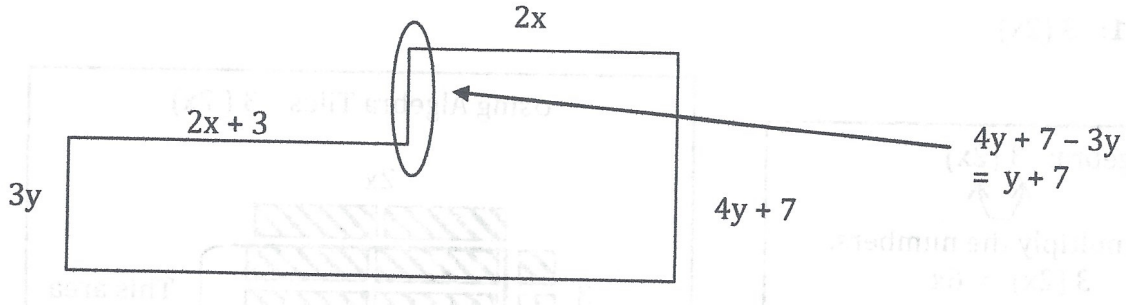

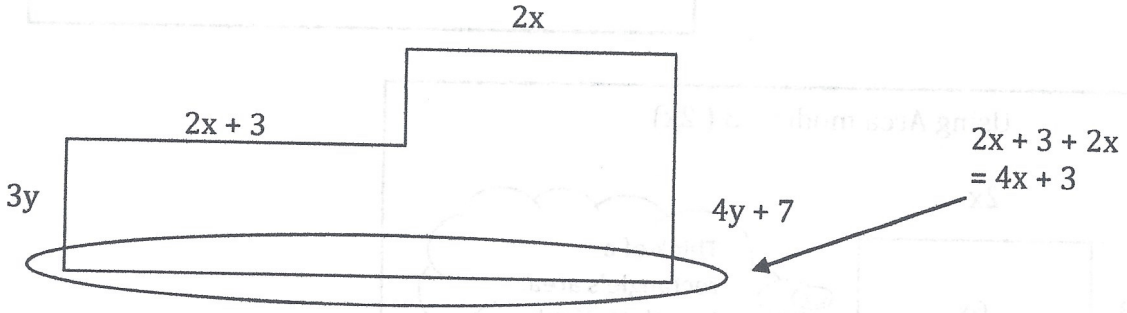

Perimeter = (3y) + (2x + 3) + (y + 7) + (2x) + (4y + 7) + (4x + 3)
= 8y + 8x + 20

b). What is the perimeter if x = 1 cm and y = 2cm ?
= 8y + 8x + 20
= 8 (2) + 8 (1) + 20 = 16 + 8 + 20 = 44 cm.