Unit 7.3 - Similar Polygons

- Remember → A **polygon**
  - ↳ any 2-dimensional shape formed with straight lines that are connected.
  - Triangles
  - Quadrilaterals
  - Pentagons
  - etc.

- Also →

$$\text{Scale Factor} = \frac{\text{New}}{\text{Old}}$$

enlargement → greater than 1

Reduction → less than 1

- So we use the **SCALE FACTOR** TO DRAW polygons that are similar
  - ↳ to scale
    - ↳ of one another

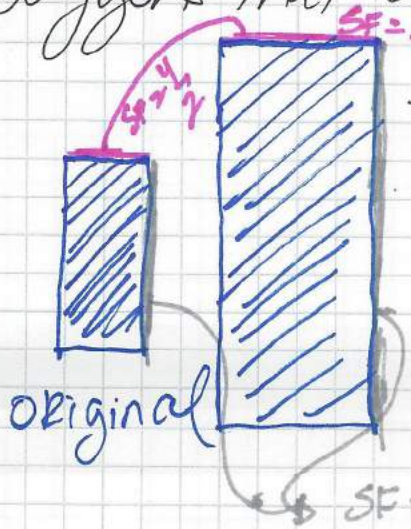

to see if the rectangles are similar, that is, scale drawings of each other

↓

The scale factor has to be equal for all corresponding sides.

So, • the scale factor is 2 for all corresponding sides

And

• All angles are equal ∴ Same shape

These are the two requirements for similar Polygons:

- THE SCALE FACTOR IS EQUAL FOR ALL CORRESPONDING SIDES
- THE ANGLES ARE EQUAL.

Take a look:

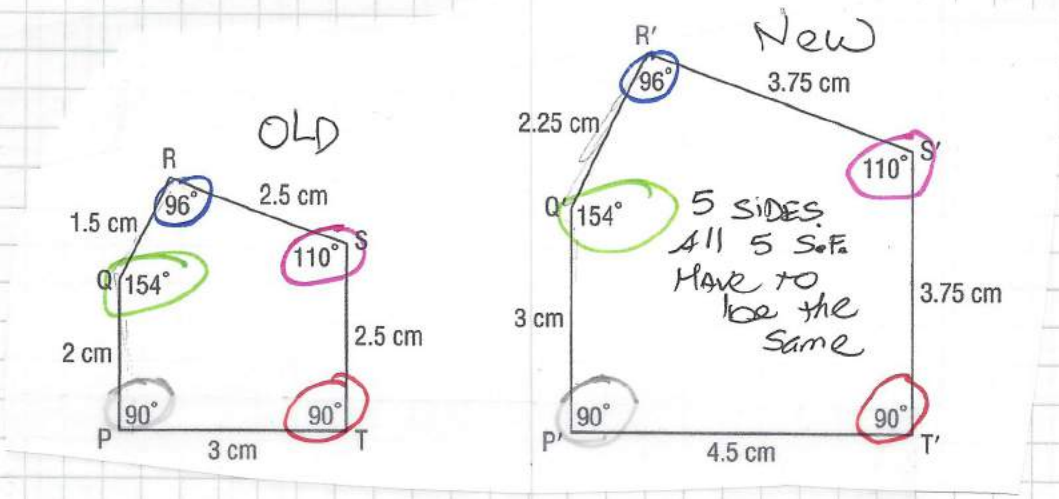

• Notice that the angles are the same (corresponding sides)

$R^\circ = R'^\circ = 96^\circ$ $S = S' = 110^\circ$ etc

• If these polygons are similar, then the scale factor is equal for all sides:

$$S.F = \frac{New}{Old} = \frac{R'Q'}{RQ} = \frac{2.25}{1.5} = 1.5 \qquad \frac{S'T'}{ST} = \frac{3.75}{2.5} = 1.5$$

$$\frac{P'T'}{PT} = \frac{4.5}{3} = 1.5 \qquad \frac{P'Q'}{PQ} = \frac{3}{2} = 1.5$$

$$\frac{Q'R'}{QR} = \frac{2.25}{1.5} = 1.5$$

So, all scale factors are equal:

$$\frac{R'Q'}{RQ} = \frac{S'T'}{ST} = \frac{P'T'}{PT} = \frac{P'Q'}{PQ} = \frac{Q'R'}{QR} = 1.5$$

Since

- All angles are equal
- S.F is constant all the way around

$\Downarrow$

Similar Polygons

$\Downarrow$

Important: Both Requirements Must Exist!

Let's look at the Examples and applications:

- Are these two polygons similar?
  - First → check the angles. Notice the polygons are placed the same way!

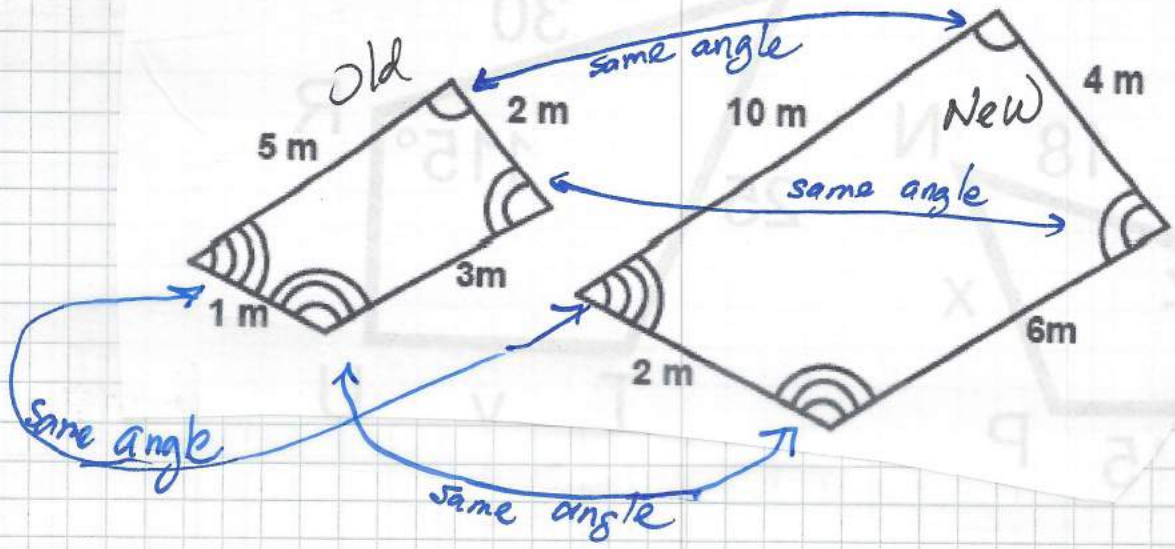

- Using CORRESPONDING SIDES, FIND the Scale Factors:

5 / 10 = S.F. = $\frac{New}{Old} = \frac{10}{5} = 2$

2 / 4 = S.F. = $\frac{New}{Old} = \frac{4}{2} = 2$

1 / 2 = S.F. = $\frac{New}{Old} = \frac{2}{1} = 2$

3 / 6 = S.F. = $\frac{New}{Old} = \frac{6}{3} = 2$

Because the angles are equal, and the scale factor is equal for all corresponding sides ⇒ Similar Polygons

SIMILAR?

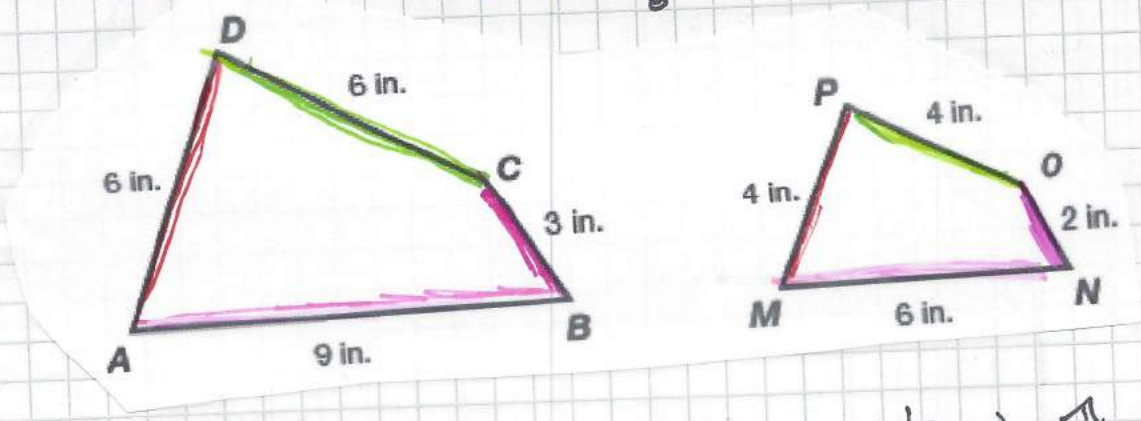

OLD ↗ New ↗

- Check CONGRUENT ("EQUAL") Angles

  In this case, they are asumed to be equal, the shapes are the same!

- check all scale factors:

$$S.F = \frac{New}{old} \Rightarrow \frac{PM}{DA} = \frac{4}{6} = 0.\overline{6}$$

$$\frac{PO}{DC} = \frac{4}{6} = 0.\overline{6}$$

$$\frac{ON}{CB} = \frac{2}{3} = 0.\overline{6}$$

$$\frac{MN}{AB} = \frac{6}{9} = 0.\overline{6}$$

Scale factors are equal

Both requirements are met...

The Polygons are similar

• Because the similar polygons have same angles <u>and</u> same scale factors:

1) Find the two corresponding sides that have known lengths, and find the scale factor:

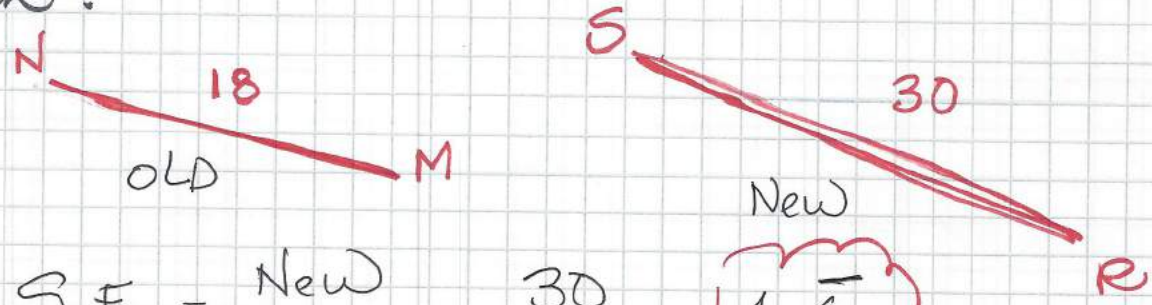

$$S.F. = \frac{\text{New}}{\text{Old}} = \frac{30}{18} = 1.\overline{6}$$

2) Now that we know the scale factor, we can multiply it by known sides, to get the unknown sides

Let's find X

↳ Set up a Proportion for S.F.

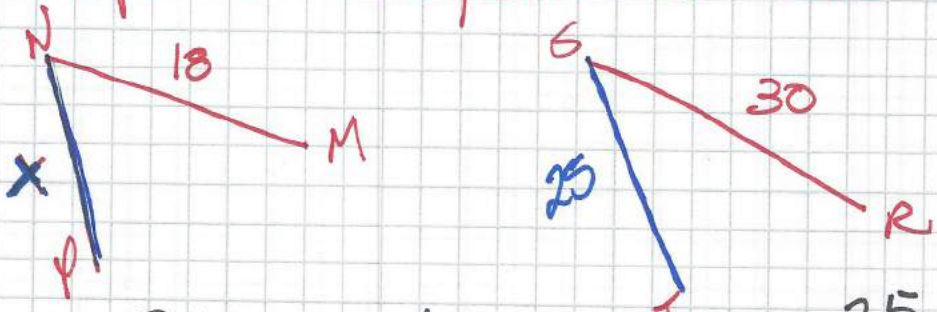

SF $\frac{30}{18}$ is the same as $\frac{25}{X}$

$$\boxed{\frac{30}{18} = \frac{25}{X}}$$ Cross-multiply!

$$30X = 18 \times 25 \rightarrow \frac{30X}{30} = \frac{450}{30}$$

$$X = 15$$

Example of application:

- When polygons are similar, you can use proportion/Ratios to find the missing lengths:

Find X and Y

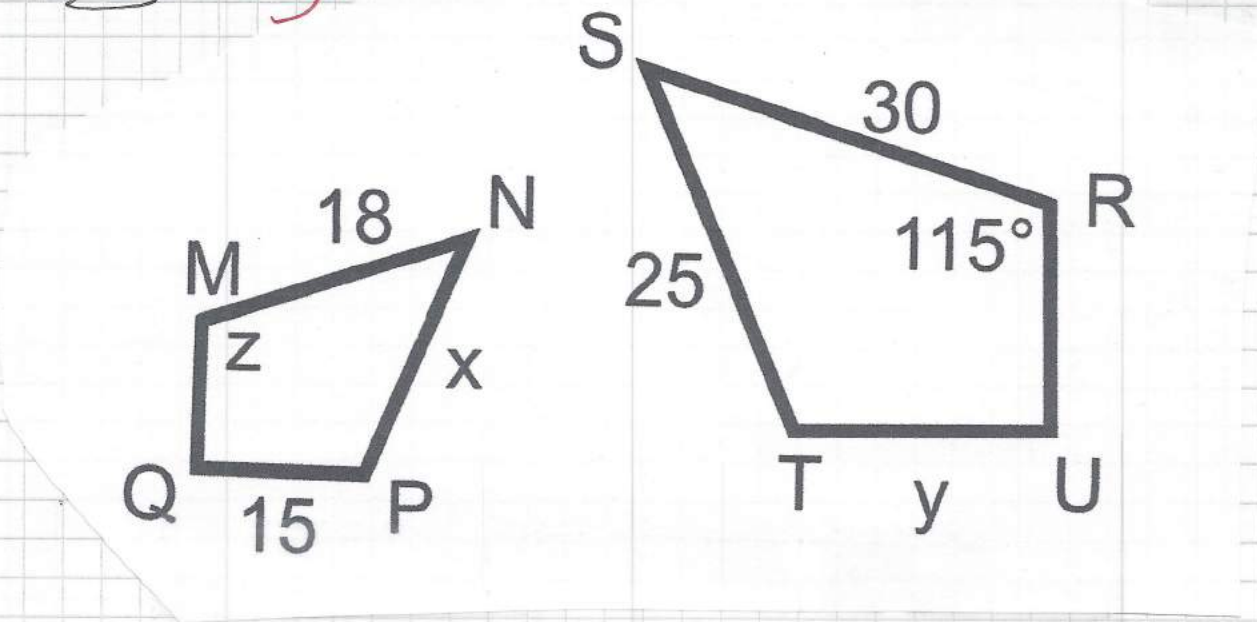

NOTICE HOW THE shapes are similar, but they are "facing" different ways.

- To ensure you have the correct corresponding sides, "Flip" the smaller one:

Now they look the same

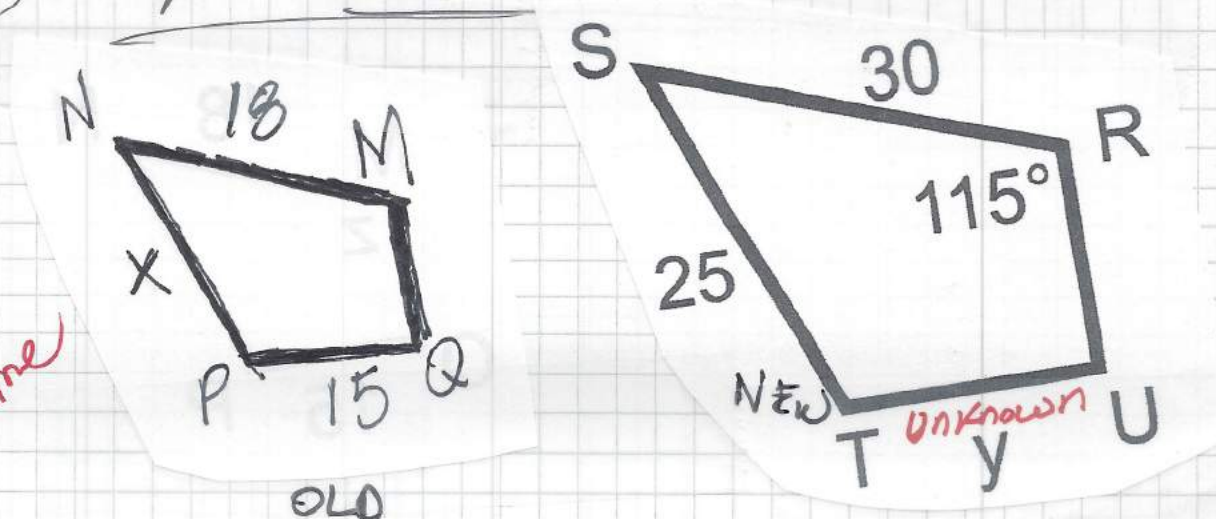

OR:

Multiply scale factor by Known length:

$X = 25 \times 1.\overline{6} = 41.\overline{6}$ this can't be!

SO

Invert it:

$$\boxed{X = 25 \times \frac{1}{1.\overline{6}} = 25 \times 0.6 = 15}$$

Let's find y

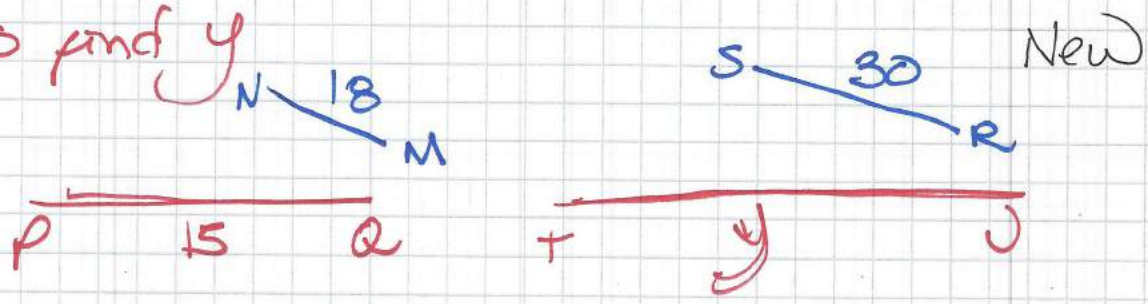

PROPORTION:

$$SF = \frac{30}{18} = \frac{y}{15}$$ CROSS Multiply!

$$y \times 18 = 30 \times 15$$

$$\frac{18y}{18} = \frac{450}{18}$$

$$y = 25$$

OR ⇒ Use Scale factor ... Remember that we treated it as an enlargement... But for y we still have to ~~reduce~~ enlarge ... (Use the Reciprocal):

$$y = 15 \times 1.\overline{6} = 25$$