Calculating Surface Area of Composite Figures

1) **Identify the different types of figures that make up the solid.**
2) **Identify what parts of each figure are on the surface of the solid.**
3) **Calculate the surface area of composite shapes.**

6.

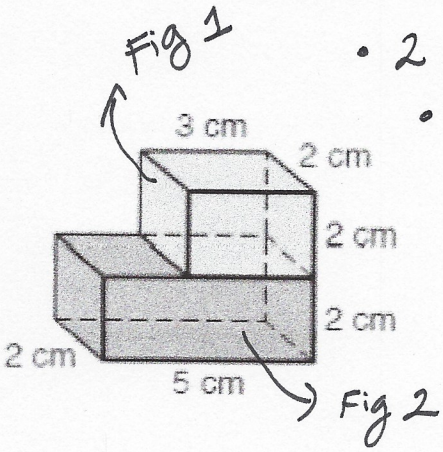

- 2 Rectangular Prisms.
- On the surface:
  - Right, left and top (front, back) of Fig 1
  - Front, back, right, left and part of top of Fig 2

- Figure 1

S_A Front, back $= 2 \times \square_3 2 = 2 \times 6\ cm^2 = 12\ cm^2$

S_A Right, left $= 2 \times \square_2 2 = 2 \times 4\ cm^2 = 8\ cm^2$

S_A top, bottom $= 2 \times \square_3 2 = 2 \times 6\ cm^2 = 12\ cm^2$

$32\ cm^2$

Total S_A Fig 1 $= 32\ cm^2$

7.

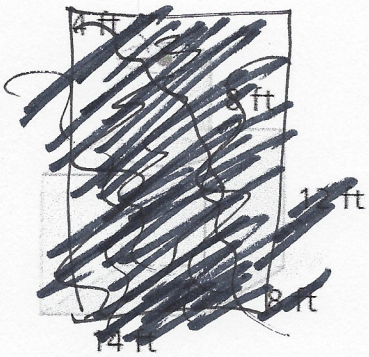

- Figure 2

S_A Front, back $= 2 \times \square_5 2 = 2 \times 10\ cm^2 = 20\ cm^2$

S_A Top, bottom $= 2 \square_5 \times 2 = 20\ cm^2$

S_A Right, left $= 2 \times \square_2 2 = 8\ cm^2$

$48\ cm^2$

Total S_A Figure 2 $= 48\ cm^2$

The overlap is the Bottom Face of Fig. 1 (multiplied by 2)

Overlap $= 2 \times \square_3 2 = 2 \times 6\ cm^2 = 12\ cm^2$

So

Total S_A = S_A Fig. 1 + S_A Fig. 2 − Overlap

$32\ cm^2 + 48\ cm^2 - 12\ cm^2 = 68\ cm^2$

ANSWER